UBio-X Pro 2

Multi-Biometric Face & Fingerprint Recognition Terminal

with Thermal Camera

- Integrated with a thermal camera and measures user's body temperature.
- In case of fever, access will be denied and the log data recorded on the server.
- Entrances to events, airports, metro stations, buildings, manufacturing plants, hotels, commercial complexes, shopping malls, gated societies and more.

CTI Resources VIRDI

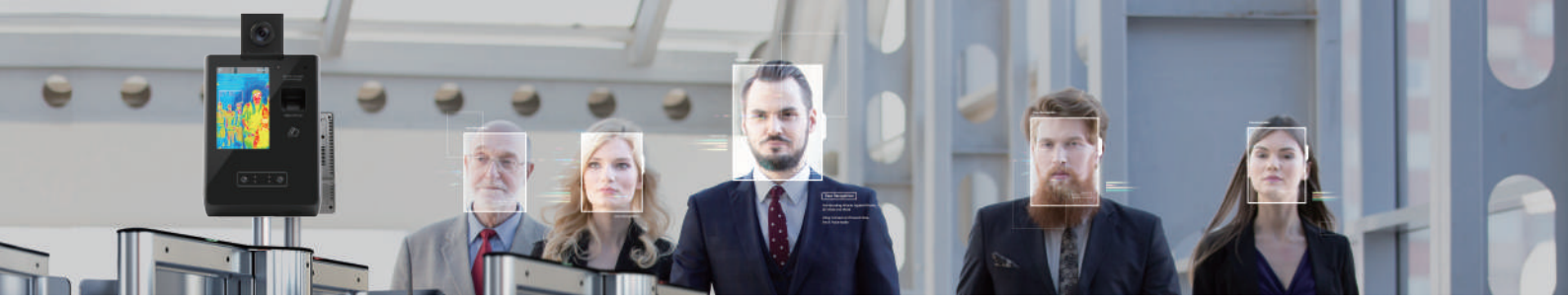

SPECIFICATIONS

Detector	
Detector Type	Micro-Bolometer (uncooled)
Array Format	384 x 288
Pixel Pitch	17 ㎛
Thermal Sensitivity (NETD)	≤50mK@F/1, 300K
Spectral range	8 to 14 ㎛
Camera Engine	
Power Supply	DC 5V
Power Consumption	< 1.8W @ (30Hz)
Video Output Format	Digital : Camera Link, USB, LVDS, LV CMOS, BT656, IP(OnVIf) Analog : NTSC, PAL
Control	USB 2.0, RS-232, I2C, UART
Frame Rate	30Hz or 60Hz
Time to First Image	< 10 sec
Dimensions (W x H x D) *with lens mount*	42.5 x 44.6 x 42.7 mm
Weight	< 110g *(without lens)*
Operating Temperature	-10℃ ~ 65℃(-40℃ ~ 65℃ Optional)
Storage Temperature	-40℃ ~ 85℃
Scen Range Temperature	-10℃ ~ 150℃(at Digital Output)
Accuracy	±0.5℃ ~ ± 0.1℃

LENS INFORMATION

Focal Length	19mm
F-Number	F/1.0
FOV (H x V -Diagonal)	19.6 x 14.7-24.4

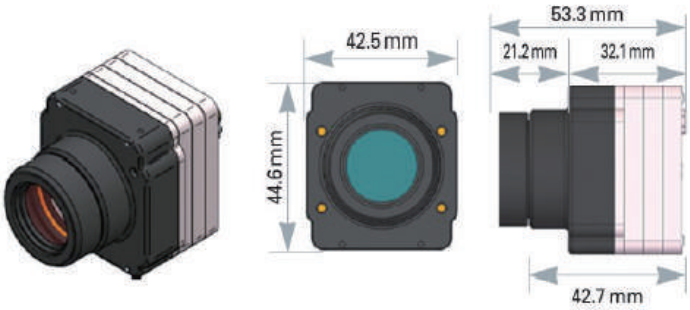

CTI Resources Sdn Bhd (421770-T)
No. 26, Jalan Kota Raja E27/E, Hicom Town Centre, Seksyen 27, 40400 Shah Alam, Selangor Darul Ehsan, Malaysia.
Tel: +60(3)5191 7818 Fax: +60(3)5191 0818

UBio-X Pro2

High-End Face & Fingerprint Recognition Terminal

Features

- **Liveness Detection**
  Anti-Spoofing attacks against photos, videos & 3D masks.
- **Face Recognition at a Distance up to 3M**
- High Ambient light conditions
  Illuminance up to 25,000 Lux
- **High Speed Face and Fingerprint Matching**
- **Visible Light Technology** with IR Technology
- **Easy Face Enrollment**-Use Camera or Phone Picture
- **Patented Fake Fingerprint Detection**

Specification

OS	Android 6.0	Fingerprint Sensor Type	Optical Sensor
CPU	1.0GHz Quad Core (Coretex-A9) + 900 MHz Dual Core (Corertex-A7)	Memory	eMMC 16GByte + 8GByte DDR3 2GB RAM (512MB x 4) + 512MB
Display	5"color TFT LCD with Touch	Certificates	KC, CE, FCC
RF/ Smart Card option	13.56MHz Smart Card Reader, 125KHz-EM, HID Prox/iClass (Optional) RF Card Reader	Interface	RS-232/RS-485, Wiegand IN/OUT Wifi (Optional), SD Card socket
Capacity	Up to 20,000 (1 Face/ 1 User) Up tp 500,000 (1 Finger/ 1 User)	FingerPrint 1:200,000 Templates < 1sec Face 1:20,000 Templates < 1sec	Event Logs: 10,000,000 Photo Logs: 20,000
Dimension(W x H x D)	149.7 x 208 x 56.4mm	Operating Temperature	-20 ~ 60 ℃